Unit:mm

9 How to mount collector arms

■Standard installation

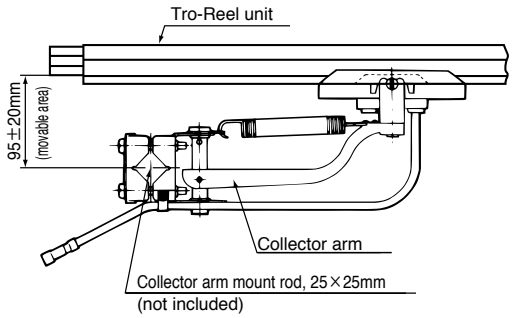

- Set the distance from the bottom surface of the Tro-reel conductor to the center ofthe collector arm mount rod (not included) to 95mm (in the center of the conductor cleraner mounting tolerance movable range 95±20mm)
- Arm must be attached parallel to the Tro-Reel unit without any twisting.

■Horizontal installation

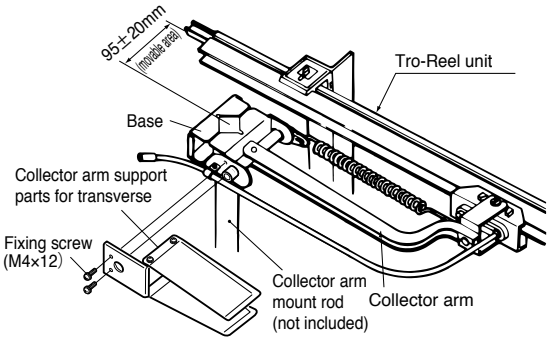

- As shown in a figure,mounted collector arm support parts for transverse on base of the collector arm.

Tightening torque of fixing screws：0.98 N・m～1.32 N・m

- Set the distance from the bottom surface of the Tro-reel conductor to the center ofthe collector arm mount rod (not included) to 95mm (in the center of the conductor cleraner mounting tolerance movable range 95±20mm)

Use range of movable

When collector arm mount rod set up a reference position, the operating range from 75mm ～ 115mm of collector arm set up to be twisting. Adjust the arm mount rod between the High-Tro-Reel unit to become 115mm or less and 75mm or more at the center between hangers, and 75mm or more at the bracket.

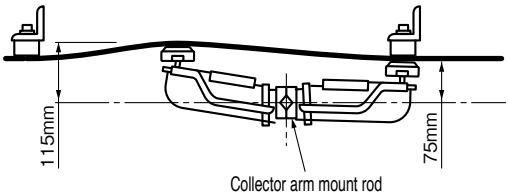

Distance to the center of the collector arm from the center of the duct

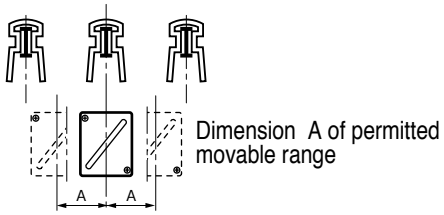

Distance to the center of the collector arm from the center of the duct

Not use the horizontal support parts	15mm
Use the horizontal support parts	5mm

■Assembly in tandem configuration

- Two collector arms should be used together (tandem type) for circuit separation and line swiching, and especially in applications in which it is imperative that collector arms not be separated from wires. Tandem collector arms cannot be used horizontally. For horizontal installations, use a single-type collector arm.

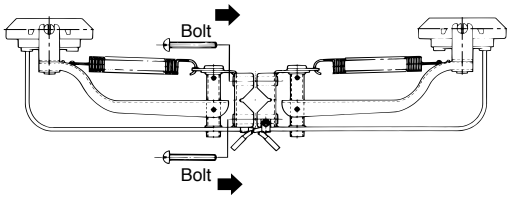

■Horizontal installation with its opening facing into tandem-type

- Mounting the horizontal support parts in both the collector arms

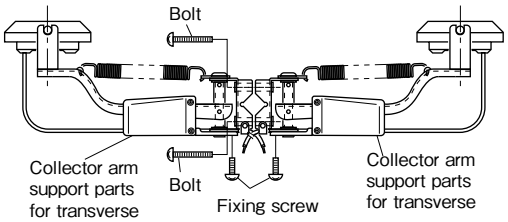

■Collector shoe replacement

- Collector shoes should be replaced when they partially wear down to the replacement indication line. Please exchange the collector shoes ahead of time when it will be worn out to the replacement indication line by the time of the next check.

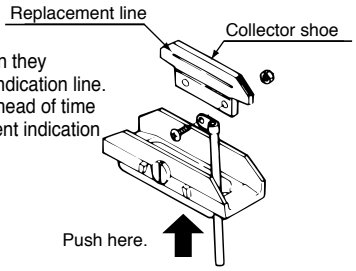

■Wire clamp

Give slack to a lead.(Lead is a fixed position, 430mm from the base of collector)
Do not affect a collector's run.

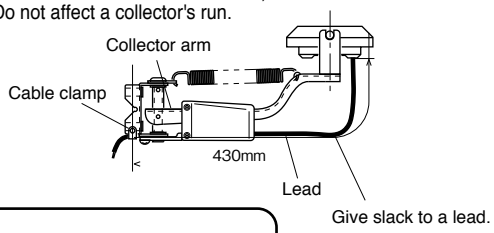

Notes

- ●After installation, be sure that the hanger, the Tro-Reel unit and the collector arm are level. Failure to do so may cause poor collector arm contact.
- ●When you want to use the collector arms with centerring horizontally,please contact Panasonic electric Works,Ltd.
- ●In a horizontal ways case, be sure to use the horizontal support parts. Failure,there is a risk of derailment or loose arms collector.
- ●Distance to the center of the collector arm from the center of the duct

Installation Procedures for other parts

10 Conductor cleaner installation

- Set the distance from the bottom surface of the Tro-reel conductor to the center of the collector arm mount rod (not included) to 95mm (in the center of the conductor clerner mounting tolerance movable range 95±20mm)

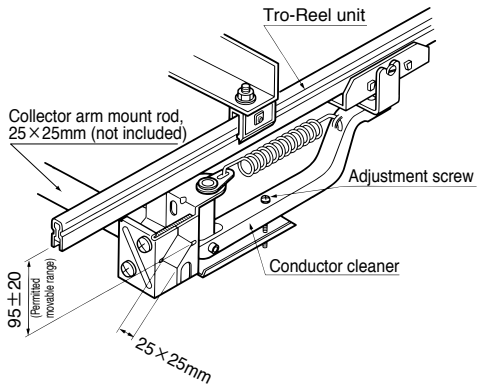

Notes

- **The conductor cleaner must be mounted parallel to the Tro-Reel unit without any twisting.**
- **When cleaning is complete, either remove the conductor cleaner, or tighten the adjustment screw so that the brush doesn't touch the conductor.**

■ Spacer To straighten twists in the Tro-Reel unit.

- **How to install a spacer**
  1. Loosen clip screws and align B with the Tro-Reel unit installation intervals.
  2. Snap the clips to the Tro-Reel units.
  3. Make sure the screws are tightened securely. Failure to do so may cause damage due to falling of equipment.

- **How to remove a spacer**
  Insert a flat tip screwdriver between the clip and the Tro-Reel and pry down with the screwdriver.

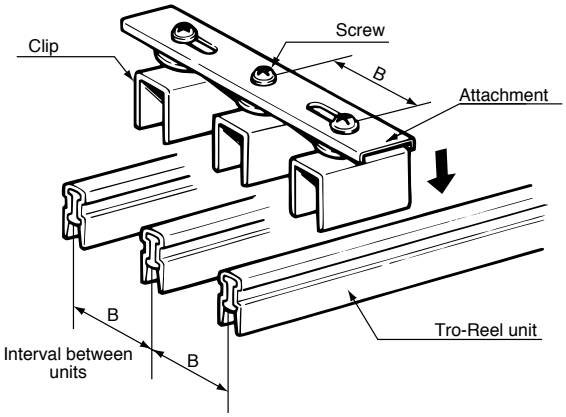

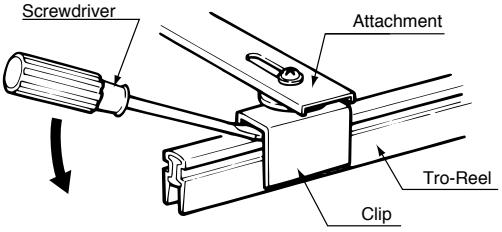

■ Sheath repair cover

1. Cut 80mm off of each end of the insulating sheath.
2. Fit on a Sheath repair cover .

For indoor and outdoor use.

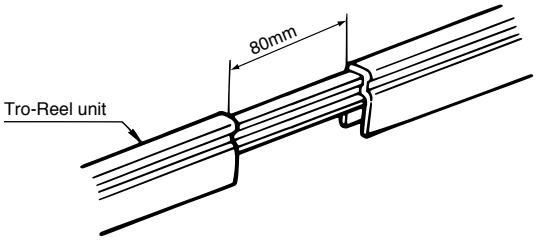

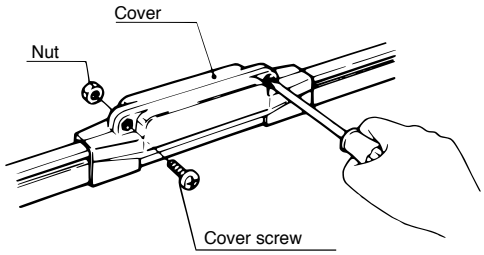

Unit:mm

■ Center feed-in joiner To feed power from an intermediate point on a line or from a joint between Tro-Reel units.

Offsetting mounting positions makes installation easier.

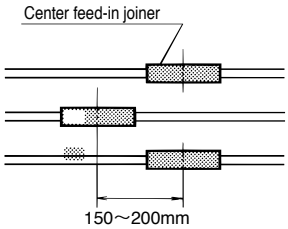

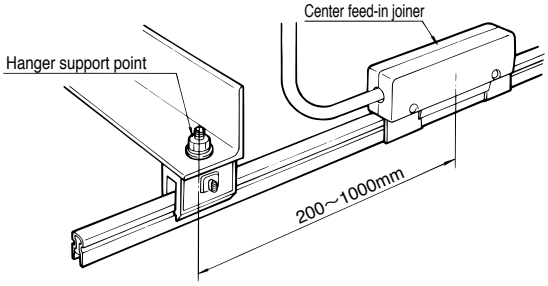

⚠ Caution

To prevent terminal screws from loosening due to vibration, a center feed-in joiner must be mounted 200 to 1000mm away from the hanger support point.
Failure to do so may cause fire.

< 60A・150A >
(Wire units must be 50mm²or less)

- **When power is fed from an intermediate point on a line**

1. Cut 80mm off of the insulating sheath.
2. Sandwich the conductor and the power wire crimp-on terminal between the terminal plates, and tighten three screws with a hex wrench [Setting Torque 6.9～7.9N・m].
   Failure to do so may cause fire.
3. Fit on a cover.

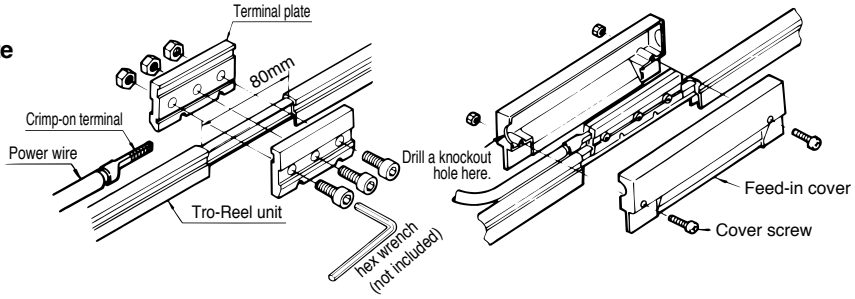

- **When connecting units and feeding power simultaneously**

1. Cut 40mm off of each end of the insulating sheath.
2. Sandwich the conductor and the power wire crimp-on terminal between the terminal plates, and tighten three screws with a hex wrench [Setting Torque 6.9～7.9N・m].
   Failure to do so may cause fire.
3. Connect the conductors with the terminal plates and drill φ5mm boles in the conductors.Insert knock pins through the holes.
4. Fit on a cover.

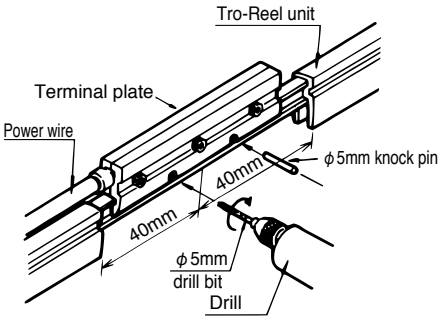

< 200A > (applicable wire: 60-100mm²)
Use the special crimp-on terminal (included).

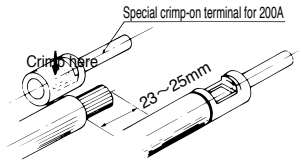

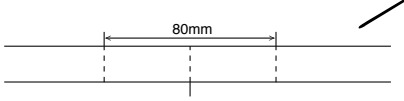

Making additional cuts midway makes it easier to peel off the insulating sheath.

Notes

- **When power is to be fed from the joint of Tro-Reel units, cut 40mm off of each end of the insulating sheath and connect them to the terminal plates. Drill a φ5mm hole in the conductor and insert a knock pin through the hole.** Failure to do so may cause damage due to falling of equipment.

< 300A > (applicable wire of 150mm² or less, or 100mm²×2)

■ When power is fed from an intermediate point on a line.

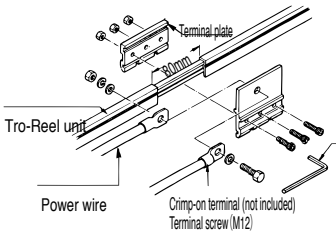

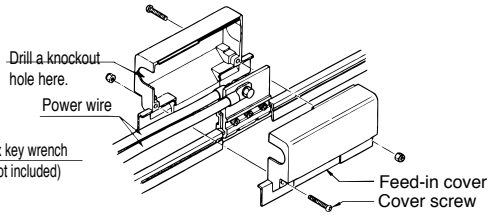

■ When connecting units and feeding power simultaneously

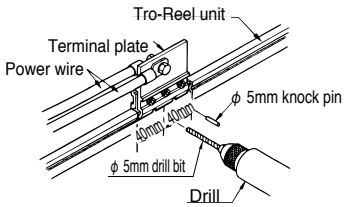

⚠ Caution

The terminal screws must be securely tightened.
(tightening torque 6.9～7.9N・m)
Failure to do so may cause fire.

Notes

- **Be sure to use a file of φ5 size.**
- **The φ5mm knock pins must be securely fitted.**
  Failure to do so may cause damage due to falling of equipment.

Intermediate tension insulator

Applies tension to a straight line of more than 100m or to an endless line, and absorbs expansion and contraction in the Tro-Reel unit due to temperature fluctuation.

● Mounting an insulator on a bracket

Mount the intermediate tension insulator to the intermediate tension insulator bracket using nuts A and B.

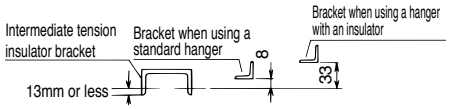

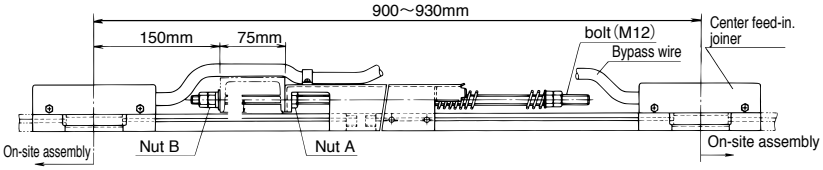

● Connection to Tro-Reel <60A and 150A and 200A>

1. Loosen the intermediate tensioninsulator nuts. Set the distance between the intermediate tension insulator and the intermediate tension insulator bracket to 150mm.
2. Connect the intermediate tension insulator A and the Tro-Reel unit with a center feed-in joiner.

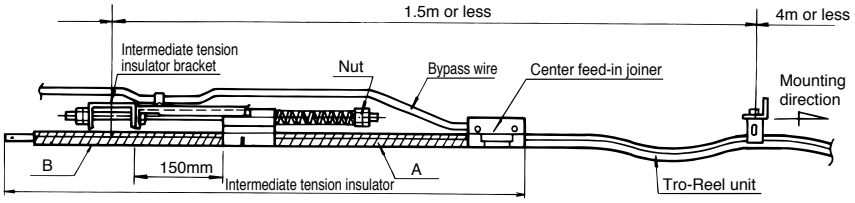

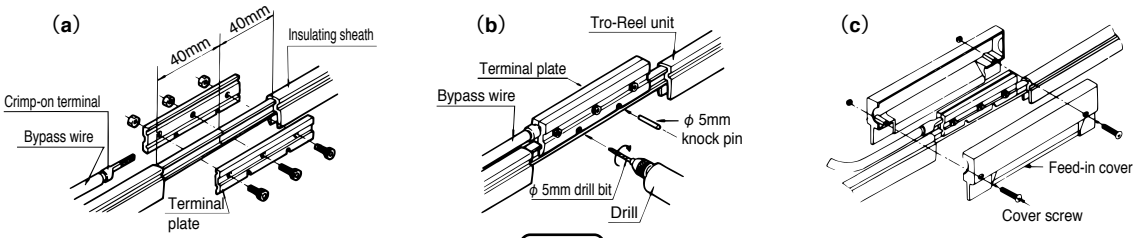

For steps (a), (b) and (c), please follow the center feed-in joiner mounting procedure in Section 8.

3. Temporarily fix the Tro-Reel unit to the hangers in order starting from the intermediate tension insulator side.

Notes

●**Be sure to use a file of ϕ5 size.**
Terminal screws and ϕ5mm knock pins must be securely tightened. (**tightening torque 6.9～7.9N·m**)
Failure to do so may cause poor collector arm contact or damage due to falling of equipment.

< 300A >

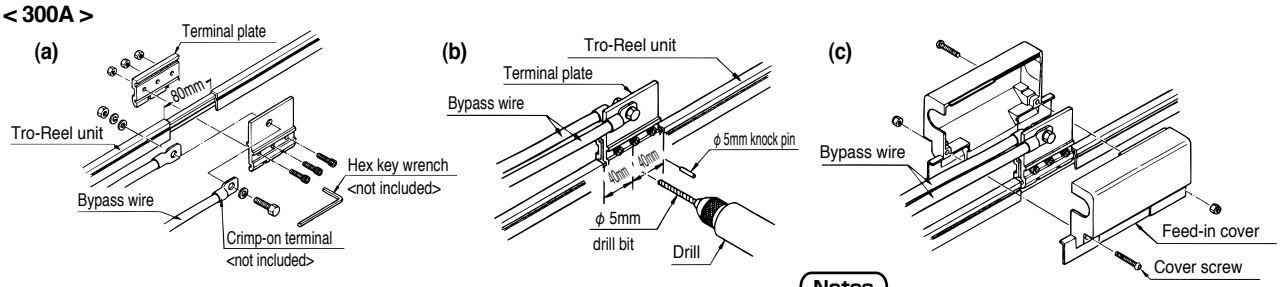

⚠ Caution

Terminal screws must be securely tightened.
Failure to do so may cause fire.

Notes

●**Be sure to use a file of ϕ5 size.**
●**The ϕ5mm knock pins must be securely fitted.**
Failure to do so may cause damage due to falling of equipment.

● Applying tension to the Tro-Reel unit

1. To take up the sag of the Tro-Reel unit, tighten the tension bolt nus until the coil spring is the length indicated below.
2. Please install a center fixed insulator in being making the space become to 15mm ± 5mm.

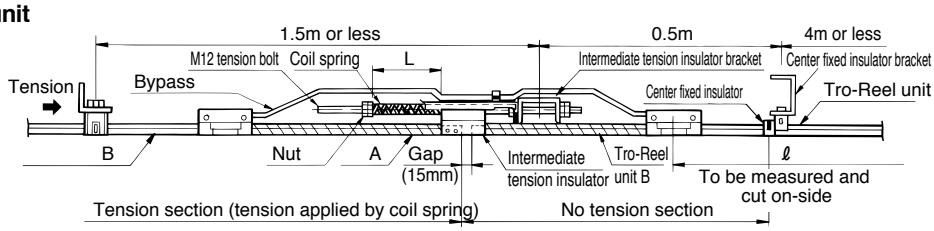

● Coil spring length

Ambient temperature during installation	L
10°C or lower	115mm
11～40°C	125mm

Notes

●**Set the gap to 15mm ± 5mm regardless of ambient temperature.**
●**If using intermediate tension insulator, a center fixed insulator is also necessary.**
Failure to do so may cause poor collector arm contact or separation from wires.

Unit:mm

■ Center fixed insulator

This part is to be used in horizontal curves, and should be attached at the joint between straight and curved sections to apply tension in the straight section.

1. Mount center fixed insulators to hangers (shown above).
2. Attach the insulator to the Tro-Reel unit. Drill a ϕ5mm hole. Insert a knock pin and fit on the cover.

Notes

- **When using hangers with insulators, be sure to mount two fo them.**
  Failure to do so may cause damage due to falling of equipment.
- **Be sure to use a file of ϕ5 size.**
  Otherwise, falling may occur.
- **In the case of a porcelain insulator hanger with it, Please contact Pansonic Electric Works Co.,Ltd.**
- **Mount the cover by all means.**
  Failure to do so may cause electric shock.

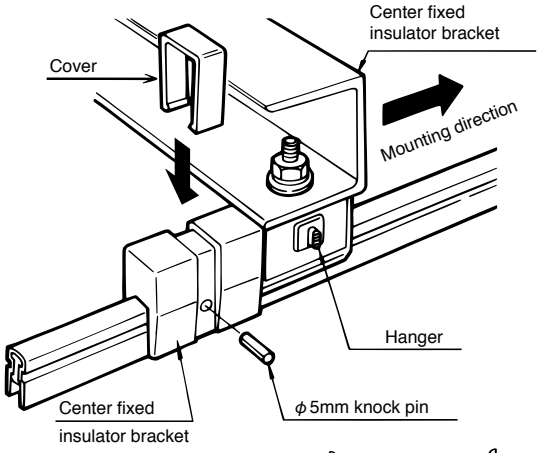

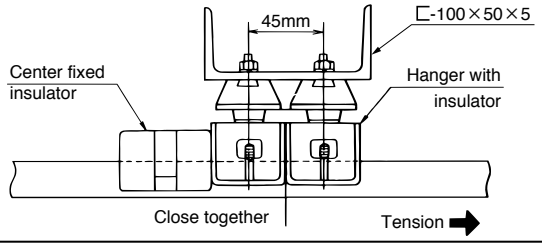

■ Joiner

To connect Tro-Reel units together.

● 60A・150A

1. Cut 40mm off of each end of the insulating sheath.
2. Sandwichthe conductor between joiner terminals. Tighten the bolts with a hex wrench tight [Setting Torque 6.9～7.9N・m]. Failure to do so may cause poor collector arm contact or damage due to falling of equipment.
3. Fit on a Sheath repair cover .

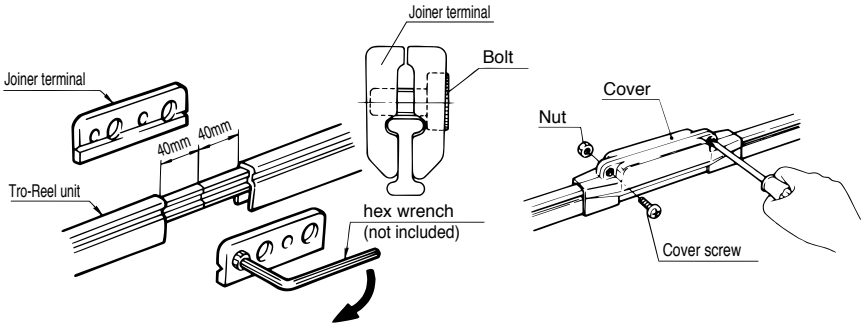

● 200A and 300A

1. Cut 40mm off of each end of the insulating sheath.
2. Connect the conductors with the terminal plates and drill ϕ5mm boles in the conductors.Insert knock pins through the holes.
3. Fit on a Sheath repair cover .

Notes

- **Be sure to use a file of ϕ5 size.**
  Failure to do so may cause poor collector arm contact or damage due to falling of equipment.

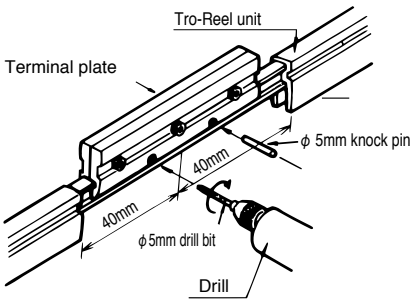

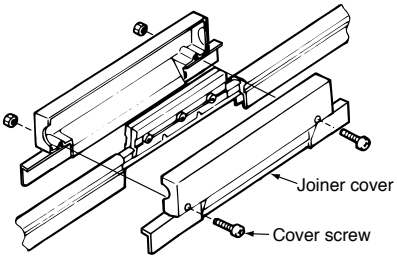

■ Guide cap To guide collector arms via turntables or traversers.

1. Mount the bracket to an I -beam or other building structure. Distances (A) from the I -beam and the mounting interval are as shown in the right description.
2. Drill a ϕ5mm hole 20mm away from the end of the Tro-Reel unit. Be sure to use a file of ϕ5 size.
3. Place the guide cap and secure it with a knock pin.
4. Fit on the cover.

Type	Angle dimensions for 3P	A size	B size	
			Minimum	Standard
Hanger bracket	∟-40×40×5	250~300mm	75mm	100mm
Bracket for retaining tension	⊏100×50×5			

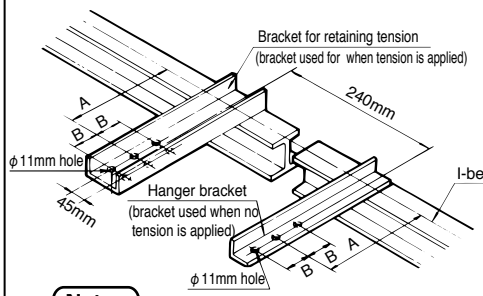

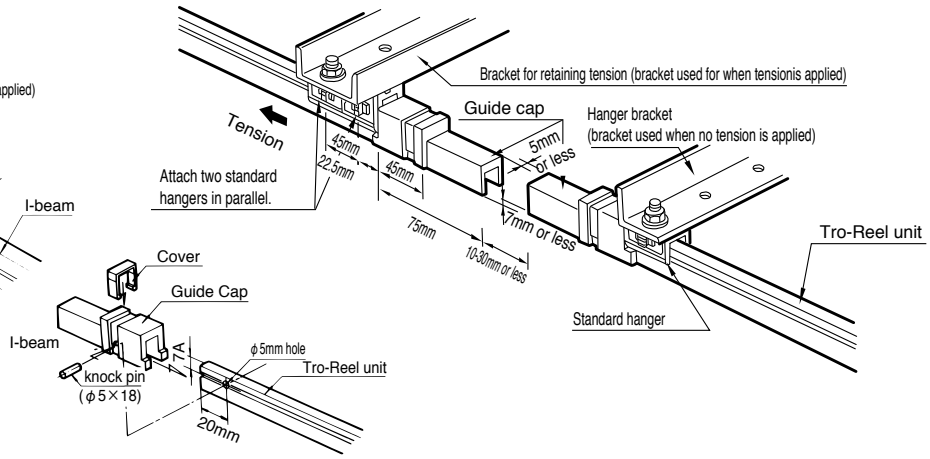

Notes

- **Use a tandem-type collector arm and set the traveling speed for switching sections to 60m/min. or less.**
- **Be sure to use only the specified dimensions for each mounting part.**
  Failure to do so may cause poor collector arm contact or separation from wires.
- **In the case using at outdoors, Please contact Pansonic Electric Works Co.,Ltd.**
- **Mount the cover by all means.**
  Failure to do so may cause electric shock.

Notes

<Mounting to 300A Tro-Reel unit>

- **Since there is a gap between the guide cap and the sliding surface to the Tro-Reel unit, the end of the Tro-Reel unit must be chamfered as shown right.**
  Failure may cause bad contact or collector arm derailing.

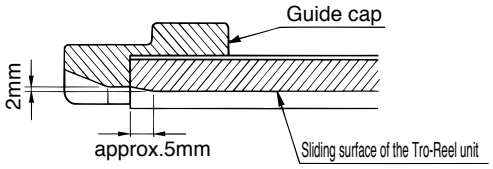

■ Insulating piece To Separate circuits electrically.

1. Drill a Φ5mm hole 20mm away from each end of the Tro-Reel unit
2. Mount an insulating piece and secure it with a knock pin.Be sure to place a knock pin securely. Failure to do so may cause damage due to falling of equipment.
3. Fit on the cover.

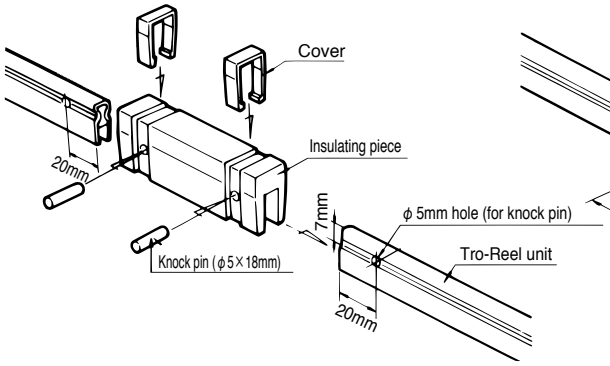

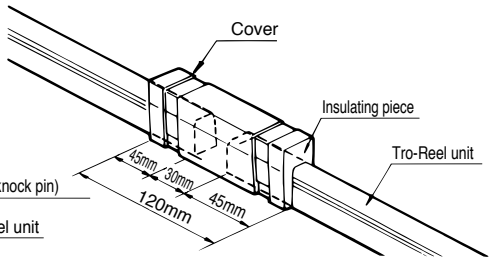

Notes

- **Mount the cover by all means.**
  Failure to do so may cause electric shock.
- **<300A>**
  Since there is a gap between the insulating piece and the sliding surface of the Tro-Reel unit, the end of the Tro-Reel unit must be chamfered as shown at right.
  Failure may cause bad contact or collector arm derailing.